Repair Parts Sheet

PH20

For PH20 date codes beginning with "B"

NOTE:
The small spring located between the two check balls, items 24 & 25, is no longer used and should not be reinstalled if found in pump being serviced.

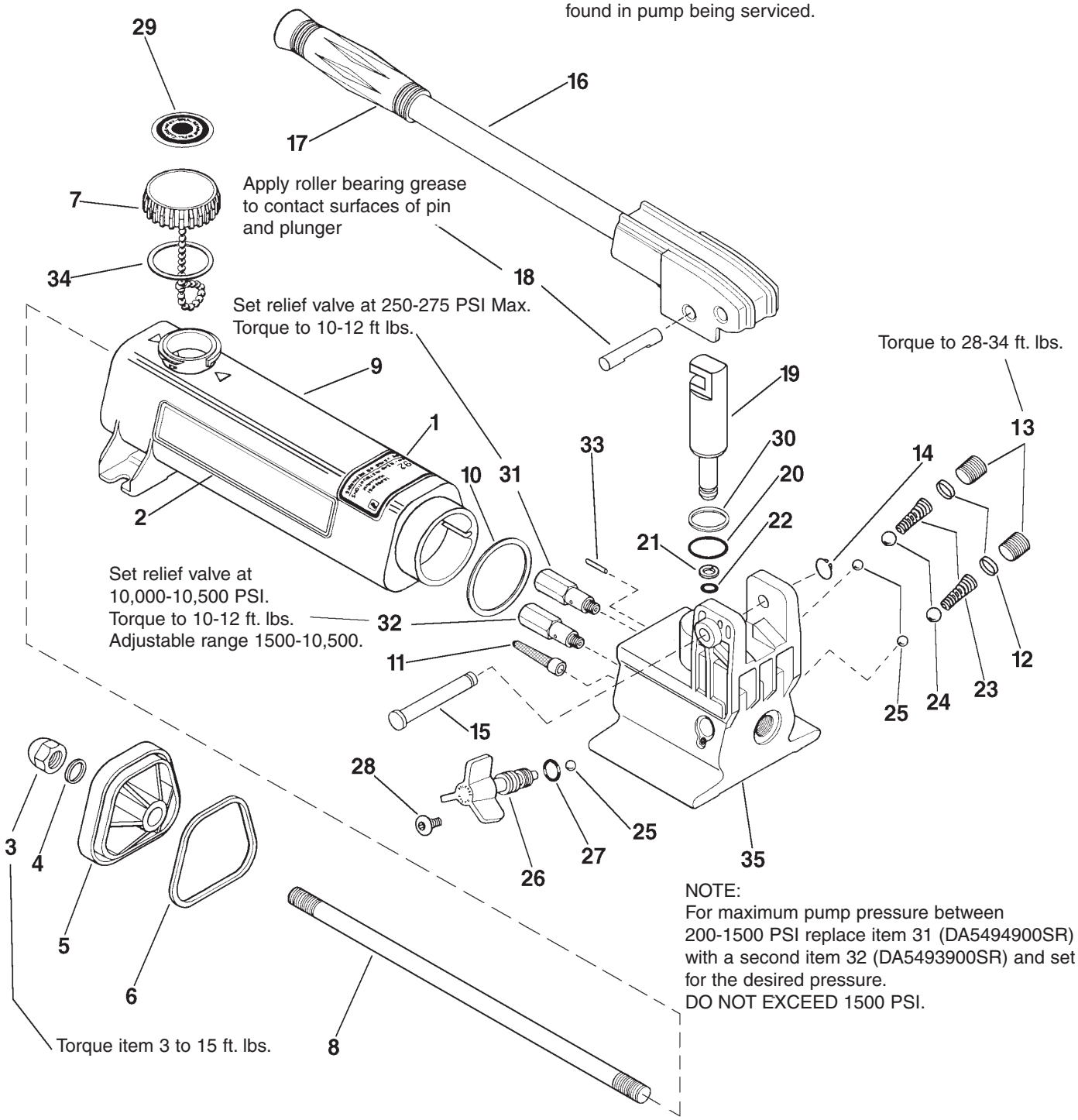

NOTE:
For maximum pump pressure between 200-1500 PSI replace item 31 (DA5494900SR) with a second item 32 (DA5493900SR) and set for the desired pressure.
DO NOT EXCEED 1500 PSI.

To protect your warranty, use only Enerpac hydraulic oil.

PARTS LIST / PH20

Item No.	Model No.	Description	Number Required
1	DA3885026	Model No. Decal	1
2	DA3884026	GB Decal	2
3	CL341055	Acorn Nut	1
4	*	Gasket	1
5	CN402020SR	End Cap	1
6	*	O-ring	1
7	CN766950SR	Vent Cap Assembly (includes #29 & 34)	1
8	CL280149	Tie Rod	1
9	DA38866025	Reservoir	1
10	*	Square Ring Seal	
11	*	Filter	1
12	*	Spring Cap	2
13	CN815006	Pipe Plug (.250-18 NPTF)	2
14	*	Retaining Ring	1
15	*CR215061SR	Beam Pin (includes item 14)	1
16	CL915900SR	Beam and Handle Assembly	1
17	CL342550	Handle Grip	1
18	P20857	Cross Pin	1
19	CN412040	Plunger	1
20	*	O-ring	1
21	*	Back-up Washer	1
22	*	O-ring	1
23	*	Spring	2
24	*	5/16” Ball	2
25	*	7/32” Ball	3
26	CL913900SR	Spindle Assembly	1
27	*	O-ring	1
28	*	Truss Head Machining Screw	1
29	*	Fill Decal	1
30	*	Back-up Washer	1
31	DA5493900SR	By-pass Valve (250-275 PSI)	1
32	DA8802900SR	Relief Valve (10,000-10,500 PSI)	1
33	*	Spring Pin	1
34	*	Vent Cap Gasket	1
35	Not Sold Separately	Pump Base - Order Complete Pump	1

* Indicates items included in, and available only as part of, repair kit P141K2. For viton seals order repair kit 142KV1 in place of standard kit P141K2.
(Kit contains 2 sets of seals; be sure to replace with seal identical to the one removed from the pump.)

REPAIR AND SERVICE INSTRUCTIONS: For repair service and parts contact your nearest GB ELECTRICAL Service Center. The Service Center will provide complete and prompt service on all GB ELECTRICAL products.

PARTS AND SERVICE: For quality workmanship and genuine GB ELECTRICAL parts, select an Authorized GB Service Center for your repair needs. Only repairs performed by an Authorized Service Center displaying the official GB Authorized sign are backed with full factory warranty. Contact GB Electrical (414) 352-4160 for the name of the nearest GB Authorized Service Center.

WARRANTY: GB ELECTRICAL, INC. warrants its products against defects in workmanship and materials for 1 year from date of delivery to user. Chain is not warranted. Warranty does not cover ordinary wear and tear, abuse, misuse, overloading, altered products or use of improper fluid.

WARRANTY RETURN PROCEDURE: When question of warranty claim arises, send the unit to the nearest GB Authorized Service Center for inspection, transportation prepaid. Furnish evidence of purchase date. If the claim comes under the terms of our warranty the Authorized Service Center will REPAIR OR REPLACE PARTS AFFECTED and return the unit prepaid.

GB Electrical, Inc.
An Applied Power Company

6101 N. Baker Road, Milwaukee, WI 53209
Phone: (414) 352-4160 FAX (414) 352-2377